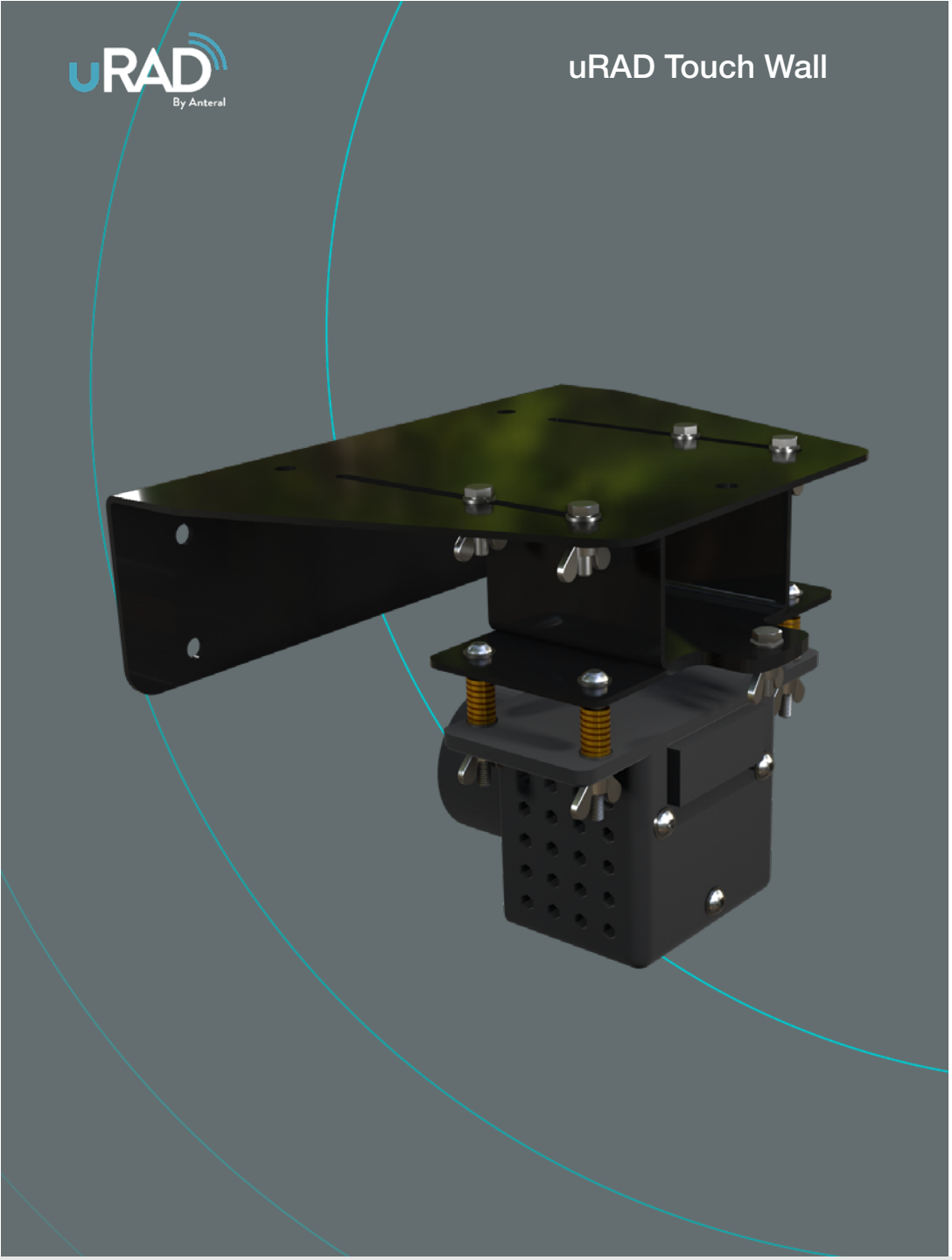

www.urad.es

contact@urad.es
+34 948 488458

uRAD Touch Wall

LiDAR system to provide tactility to any surface.

DESCRIPTION

uRAD Touch Wall is a system that **allows any surface to have tactile capabilities** and transform it into a touchscreen. Based on LiDAR technology, uRAD Touch Wall creates an **invisible laser curtain** over the surface to be made tactile. When the user touches this curtain, the software translates this information into touch movements.

With uRAD Touch Wall, you can perform **the most common touch screen gestures**: mouse click, drag objects, zoom in or out, type on a keyboard, scroll through a screen, etc. The device does not generate the image to be touched; this image must be projected onto the surface using an audiovisual projector or a similar device.

The software includes two ways to communicate touch input: via the **TUIO protocol** and via **mouse events** as if it were a peripheral device. It supports up to 20 simultaneous gestures and the definition of multiple restricted non-touch zones. Operation is **highly intuitive**, widely

configurable, with an accuracy of ±2 cm, and easy installation on both ceilings and floors.

USE CASES

- Teaching classrooms with smart walls
- Interactive multimedia visualization
- Tactile video games
- Computer screen management
- Museums, exhibitions, theme parks

Disclosure Information: This document is for information only. Anteral S.L. reserves the right to change this characteristic data and other specifications without notice. Anteral S.L. makes no warranty, representation or guarantee regarding the suitability of its products for any particular purpose, nor does Anteral S.L. assume any liability whatsoever arising out of the use or application of any product(s) or information. *www.anteral.com*

Polígono Areta, C/Badostáin 2, planta 2. 31620,
Huarte, (Navarra), SPAIN

contact@urad.es
+34 948 488458

TECHNICAL CHARACTERISTICS

Scope of application	Indoor and outdoor
Emission	Infrared (905 nm)
Laser class	1 (IEC 60825-1:2014, EN60825-1:2014+A11:2021
Coverage angle	276 º
Angular resolution	0.25 º
Sampling rate	two versions: 25 Hz, 50 Hz
Range	0.05 – 25 meters
Flatness of the field	±1º
Detection point	3312
Response time	40 ms
Supply voltage	9V DC – 30V DC
Consumption	Typical 4.5W, maximum 17W
Output current	≤ 200 mA
LiDAR housing	Suretec 650 coated aluminum
LiDAR optics cover	Polycarbonate
Clamping system	Anodized aluminum
Weight	220 grams 550 grams (with clampling)
Dimensions	60 x 60 x 82 mm 161 x 200 x 135 mm (with clamping)
Temperature	-30ºC to +50ºC (operation) -40ºC to +70ºC (storage)
Degree of protection	IP65 (IEC 60529:1989+AMD1:1999+AMD2:2013) IP67 (IEC 60529:1989+AMD1:1999+AMD2:2013)
Protection class	III (IEC 61140:2016-11)
Electrical safety	IEC 61010-1:2010-06+AMD1:2016
Certifications	CE, UK CA, ACMA, China-RoHs, cTUVus

ANCHORING

Several anchoring options are provided: wall anchoring (4 side holes) and floor or ceiling anchoring (3 top holes). The system includes several butterfly screws to adjust the tilt on any of the three axes.

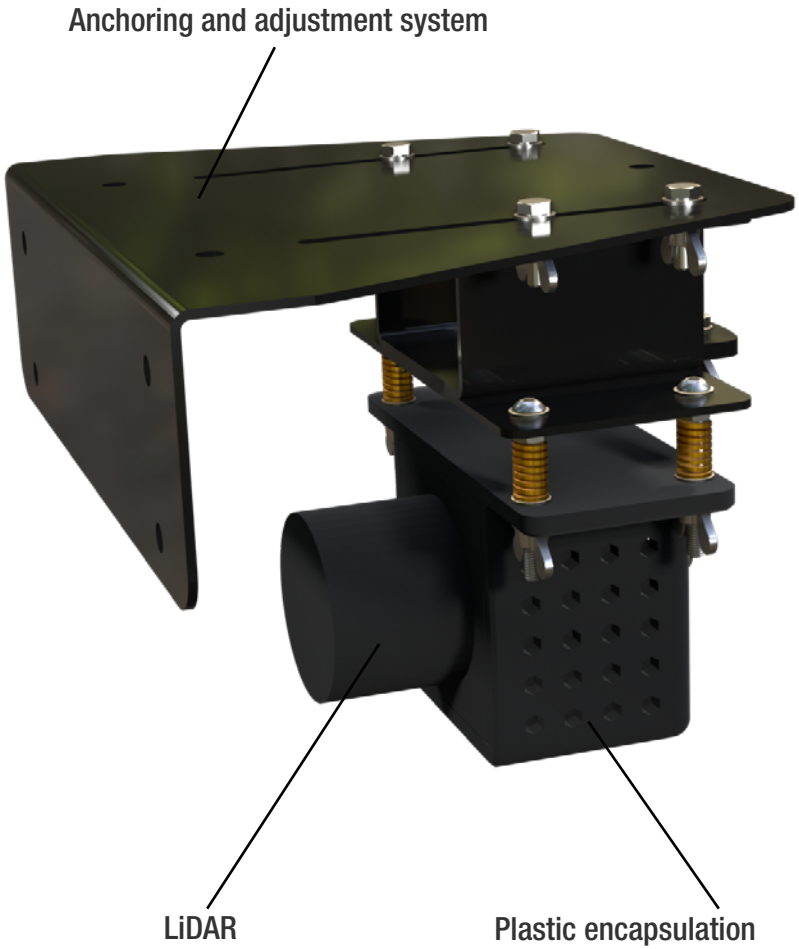

Disclosure Information: This document is for information only. Anteral S.L. reserves the right to change this characteristic data and other specifications without notice. Anteral S.L. makes no warranty, representation or guarantee regarding the suitability of its products for any particular purpose, nor does Anteral S.L. assume any liability whatsoever arising out of the use or application of any product(s) or information. *www.anteral.com*

Polígono Areta, C/Badostáin 2, planta 2. 31620,
Huarte, (Navarra), SPAIN

contact@urad.es
+34 948 488458

EQUIPMENT FEATURES

Operating System	Windows, macOS, Linux
Configuration software	Web browser, executable, API REST
Drivers	ROS1, ROS2, C++, Python
Connectivity	Ethernet (cable included)
Communication protocols	TUIO Local mouse event emulation
Configuration file format	.json
Pointer precision	±2 cm
Number of simultaneous pointers	20
Number of configurable blind spots	As many as needed
Responsiveness	Configurable interactive smoothing
Available gestures	Click Double click Long press Drag and rotate objects Screen scaling (zoom in/out) Scroll Multiple touches
Settings	Width, height, offsets, rotation, smoothing, stability, sensitivity, blob filter, particle filter, multi-echo
Mounting	Floor or ceiling

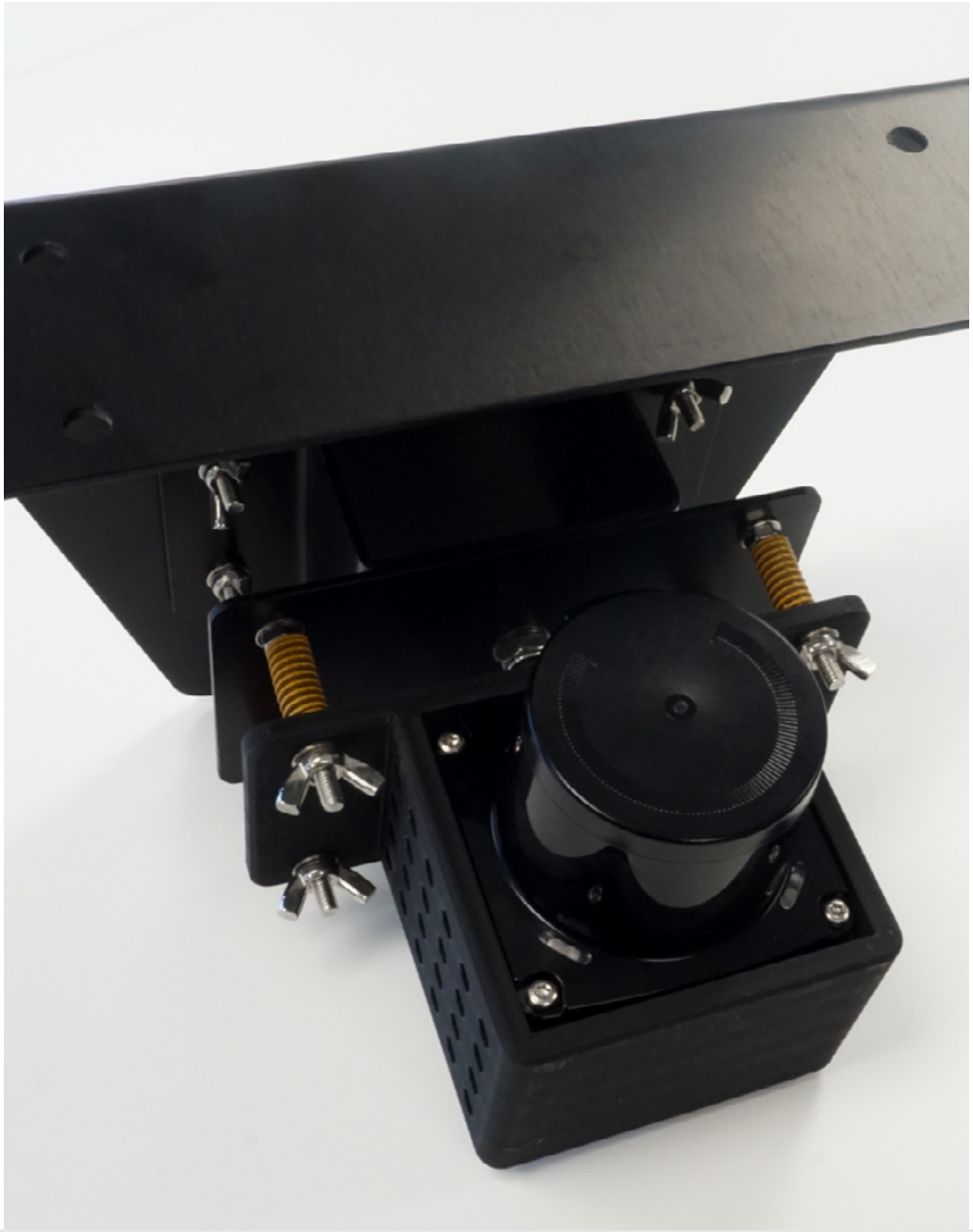

Disclosure Information: This document is for information only. Anteral S.L. reserves the right to change this characteristic data and other specifications without notice. Anteral S.L. makes no warranty, representation or guarantee regarding the suitability of its products for any particular purpose, nor does Anteral S.L. assume any liability whatsoever arising out of the use or application of any product(s) or information. *www.anteral.com*

Polígono Areta, C/Badostáin 2, planta 2. 31620,
Huarte, (Navarra), SPAIN

contact@urad.es
+34 948 488458

MECHANICAL SCHEMA

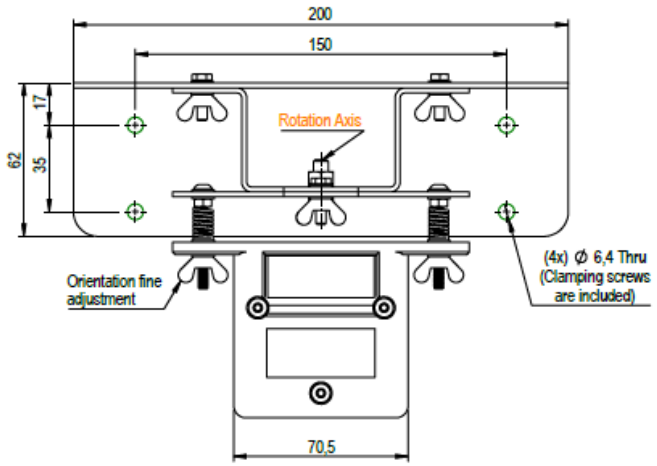

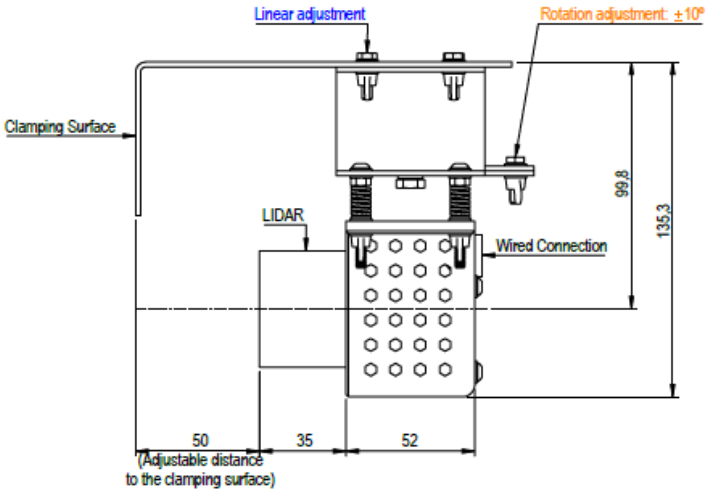

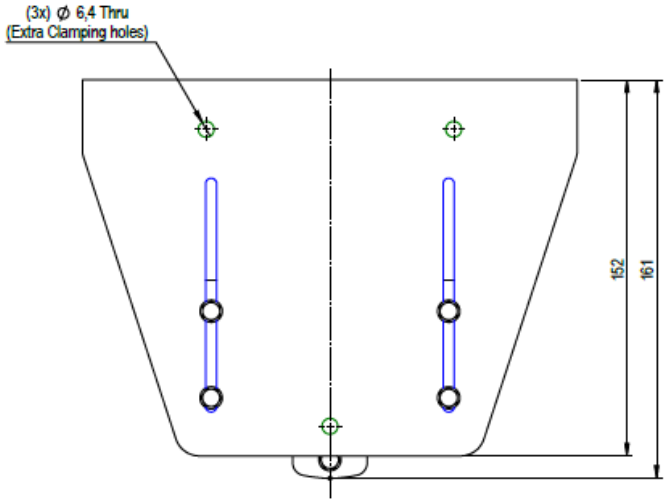

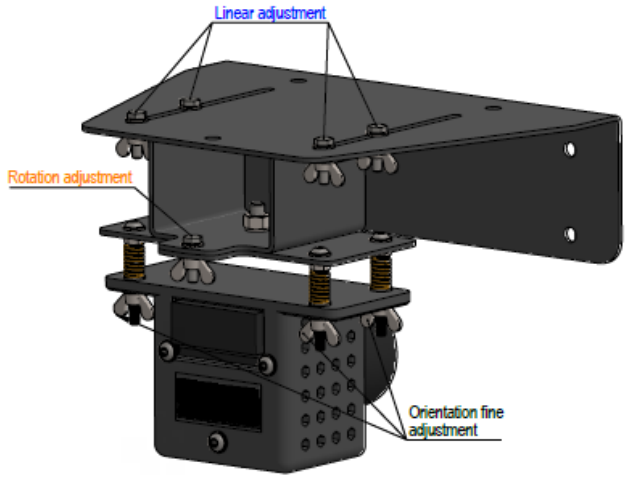

Disclosure Information: This document is for information only. Anteral S.L. reserves the right to change this characteristic data and other specifications without notice. Anteral S.L. makes no warranty, representation or guarantee regarding the suitability of its products for any particular purpose, nor does Anteral S.L. assume any liability whatsoever arising out of the use or application of any product(s) or information. *www.anteral.com*

Polígono Areta, C/Badostáin 2, planta 2. 31620, Huarte, (Navarra), SPAIN

DISCLAIMER

Anteral S.L. The information contained in this document is subject to change at any time and without prior notice.
Anteral does not assume any responsibility or liability for any loss, damage, or defect in its products caused in whole or in part by:

1. The use of any circuitry other than the circuitry included in Anteral S.L. products,
2. Misuse or abuse, including electrostatic discharge, negligence, or accidents,
3. Unauthorized modifications or repairs that have been soldered or altered in the assembly, which cannot be tested by Anteral S.L. under normal testing conditions, or
4. Improper installation, storage, handling, or transportation, or
5. Exposure to unusual physical, thermal, or electrical stress.

Anteral S.L. makes no warranty of any kind, either express or implied, regarding this material, and specifically disclaims all warranties, whether express or implied, by fact or law, including implied warranties of merchantability and fitness for a particular purpose, and any implied warranty arising from the course of dealing or trade usage, as well as any common law obligation related to accuracy or lack of negligence, with respect to this material, any Anteral S.L. product, and any product documentation. All sales are conditioned upon compliance with the critical use policy detailed below.

CRITICAL USE EXCLUSION POLICY: THE BUYER AGREES NOT TO USE ANTERAL S.L. PRODUCTS FOR APPLICATIONS OR COMPONENTS USED IN LIFE-SUPPORT DEVICES OR FOR OPERATING NUCLEAR FACILITIES OR FOR USE IN OTHER CRITICAL APPLICATIONS OR COMPONENTS WHERE LIFE OR PROPERTY MAY BE AT STAKE.

Anteral S.L. holds all rights, titles, and interests in the intellectual property related to Anteral S.L. products, including any software, firmware, copyrights, patents, or trademarks. The sale of Anteral S.L. products does not transfer or imply any license under patents or other rights. Anteral S.L. retains copyrights and trademarks registered in all documents, catalogs, and plans supplied in connection with or subordinate to the sale of products or services by Anteral S.L. Unless Anteral S.L. agrees otherwise in writing, any reproduction, modification, translation, compilation, or representation of this material is strictly prohibited.

Latest version: 20/06/2026

THE POWER OF RADAR. THE POWER OF YOU.

Disclosure Information: This document is for information only. Anteral S.L. reserves the right to change this characteristic data and other specifications without notice. Anteral S.L. makes no warranty, representation or guarantee regarding the suitability of its products for any particular purpose, nor does Anteral S.L. assume any liability whatsoever arising out of the use or application of any product(s) or information. *www.anteral.com*

Polígono Areta, C/Badostáin 2, planta 2. 31620,
Huarte, (Navarra), SPAIN